www.americanmeltblown.com
1030 East Elm Street • Rensselaer, IN 47978
(219) 866-3500 - Office
(219) 866-3570 - Fax
order@ambf.us - Email

AMERICAN MELT BLOWN & FILTRATION

Cartridge Multiround Options and Parts

MR30HC78304FCS15

Dimensions on pgs. 65 & 66

Individual Replacement Parts & Numbers

Part Description	Part Number	Price
Rod End for MR12 to MR48	EB7/8	$ 65.00
Eye Nut for MR12 to MR48	EN7/8	$ 47.00
Clevis Bolt Assembly for MR12 to MR48	CBA3/4	$ 15.00
Davit Crank Handwheel MR12 to MR30	HND8	$133.00
Davit Crank Handwheel MR36 to MR48	HND10	$155.00

316SS Cup & Spring Assembly

Part Number	Price
SBTC	$ 45.00

316SS V-Guide Posts

Cartridge Length	Part Number	Price
20"	CGP20	$ 20.00
30"	CGP30	$ 24.00
40"	CGP40	$ 38.00

MR30HC78304FCB15

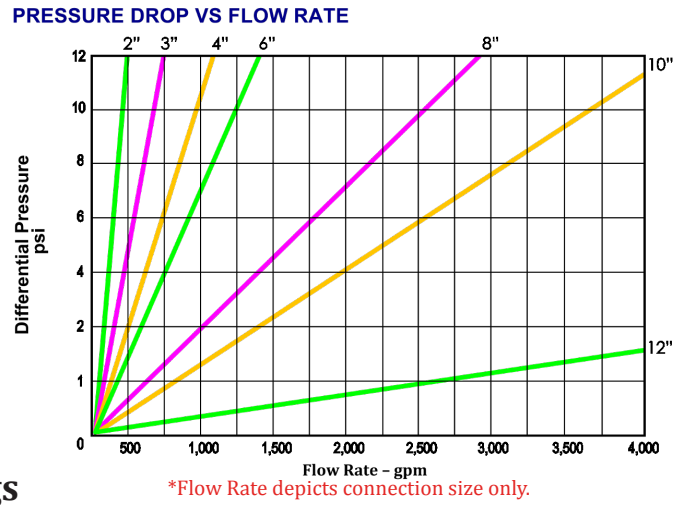

*Flow Rate depicts connection size only.

O-Rings

Housing	Part Number	Price	Housing	Part Number	Price	Housing	Part Number	Price
BUNA			VITON			SILICONE		
MR12	SBMR12OB	$ 35.00 x 4 = $ 175.00	MR14	SBMR12OV	CALL FACTORY	MR12	SBMR12OS	$ 115.00 x 4 = $ 460.00
MR16	SBMR16OB	$ 35.00 x 4 = $ 175.00	MR16	SBMR16OV	CALL FACTORY	MR16	SBMR16OS	$ 115.00 x 4 = $ 460.00
MR18	SBMR18OB	$ 35.00 x 4 = $ 175.00	MR18	SBMR18OV	CALL FACTORY	MR28	SBMR18OS	$ 115.00 x 4 = $ 460.00
MR24	SBMR24OB	$ 35.00 x 4 = $ 175.00	MR24	SBMR24OV	CALL FACTORY	MR24	SBMR24OS	$ 115.00 x 4 = $ 460.00
MR30	SBMR30OB	$ 35.00 x 4 = $ 175.00	MR30	SBMR30OV	CALL FACTORY	MR30	SBMR30OS	$ 115.00 x 4 = $ 460.00
MR36	SBMR36OB	$ 50.00 x 4 = $ 200.00	MR36	SBMR36OV	CALL FACTORY	MR36	SBMR36OS	$ 185.00 x 4 = $ 740.00
MR42	SBMR42OB	$ 50.00 x 4 = $ 200.00	MR42	SBMR42OV	CALL FACTORY	MR42	SBMR42OS	$ 185.00 x 4 = $ 740.00
MR48	SBMR48OB	$ 50.00 x 4 = $ 200.00	MR48	SBMR48OV	CALL FACTORY	MR48	SBMR48OS	$ 185.00 x 4 = $ 740.00

***O-Rings come in packages of 4**

All weights & dimensions are approximate. Dimensions will vary with material selection & psi.

© AMBF 2017

AMERICAN
MELT BLOWN & FILTRATION

www.americanmeltblown.com
1030 East Elm Street • Rensselaer, IN 47978
(219) 866-3500 - Office
(219) 866-3570 - Fax
order@ambf.us - Email

List Prices

Cartridge Multiround

MR18 HC 26 20 4F 6 S 15

- **Housing Style / Tank (inches)**: MR = Multiround; 12, 16, 18, 24, 30, 36, 42, 48
- **Housing Type**: Cartridge
- **# of Cartridges**: 11, 20, 26, 50, 78, 112, 155, 205
- **Cartridge Length**: 20, 30, 40
- **Connection (inches)**: 2, 3, 4, 6, 8, 10, 12
- **Connection Type**: F = Flange
- **Material**: C = Carbon; 4 = 304SS; 6 = 316SS
- **Outlet Location**: S = Side; B = Bottom
- **Pressure Rating (PSI)**: 15 = 150

Model #	Cartridge Length	Connection Size	Carbon	304SS
			Flanged	Flanged
MR12 11 Cartridges	20"	2"	$ 3,640.00	$ 7,565.00
		3"	$ 3,923.00	$ 7,847.00
		4"	$ 4,201.00	$ 7,423.00
	30"	2"	$ 3,921.00	$ 7,985.00
		3"	$ 4,063.00	$ 8,123.00
		4"	$ 4,202.00	$ 8,268.00
	40"	2"	$ 4,060.00	$ 8,124.00
		3"	$ 4,343.00	$ 8,266.00
		4"	$ 4,481.00	$ 8,689.00
MR16 20 Cartridges	20"	2"	$ 4,562.00	$ 8,994.00
		3"	$ 4,700.00	$ 9,265.00
		4"	$ 4,967.00	$ 9,534.00
	30"	2"	$ 4,832.00	$ 10,475.00
		3"	$ 4,965.00	$ 10,610.00
		4"	$ 5,102.00	$ 10,878.00
	40"	2"	$ 5,231.00	$ 10,609.00
		3"	$ 5,504.00	$ 11,011.00
		4"	$ 5,111.00	$ 11,415.00
MR18 26 Cartridges	20"	2"	$ 5,102.00	$ 10,743.00
		3"	$ 5,237.00	$ 10,876.00
		4"	$ 5,371.00	$ 11,415.00
	30"	2"	$ 5,236.00	$ 10,877.00
		3"	$ 5,370.00	$ 11,281.00
		4"	$ 5,503.00	$ 11,415.00
	40"	2"	$ 5,640.00	$ 11,412.00
		3"	$ 5,772.00	$ 11,950.00
		4"	$ 5,172.00	$ 12,221.00
MR24 50 Cartridges	20"	3"	$ 8,730.00	$ 20,282.00
		4"	$ 9,262.00	$ 20,681.00
		6"	$ 9,534.00	$ 20,818.00
	30"	3"	$ 9,670.00	$ 20,684.00
		4"	$ 10,070.00	$ 20,950.00
		6"	$ 10,475.00	$ 21,490.00
	40"	3"	$ 10,341.00	$ 21,355.00
		4"	$ 10,472.00	$ 21,623.00
		6"	$ 10,874.00	$ 22,564.00

Model #	Cartridge Length	Connection Size	Carbon	304SS
			Flanged	Flanged
MR30 78 Cartridges	20"	3"	$ 12,622.00	$ 25,652.00
		4"	$ 12,760.00	$ 26,190.00
		6"	$ 13,295.00	$ 26,995.00
	30"	3"	$ 13,431.00	$ 26,930.00
		4"	$ 13,700.00	$ 27,131.00
		6"	$ 13,966.00	$ 27,532.00
	40"	3"	$ 14,503.00	$ 28,202.00
		4"	$ 14,772.00	$ 28,741.00
		6"	$ 15,041.00	$ 29,411.00
MR36 112 Cartridges	20"	4"	$ 17,045.00	$ 30,532.00
		6"	$ 17,291.00	$ 30,900.00
		8"	$ 17,535.00	$ 343,35.00
	30"	4"	$ 18,023.00	$ 35,442.00
		6"	$ 18,516.00	$ 38,017.00
		8"	$ 18,453.00	$ 38,994.00
	40"	4"	$ 19,372.00	$ 39,362.00
		6"	$ 19,740.00	$ 39,735.00
		8"	$ 19,862.00	$ 39,120.00
MR42 155 Cartridges	20"	6"	$ 20,353.00	$ 39,735.00
		8"	$ 21,091.00	$ 40,592.00
		10"	$ 21,338.00	$ 43,043.00
	30"	6"	$ 21,950.00	$ 44,150.00
		8"	$ 22,195.00	$ 45,372.00
		10"	$ 23,422.00	$ 58,866.00
	40"	6"	$ 24,281.00	$ 60,091.00
		8"	$ 24,525.00	$ 61,320.00
		10"	$ 25,872.00	$ 60,950.00
MR48 205 Cartridges	20"	8"	$ 25,871.00	$ 60,950.00
		10"	$ 26,855.00	$ 62,545.00
		12"	$ 27,470.00	$ 63,525.00
	30"	8"	$ 28,942.00	$ 71,622.00
		10"	$ 29,310.00	$ 72,231.00
		12"	$ 29,676.00	$ 74,810.00
	40"	8"	$ 20,780.00	$ 76,033.00
		10"	$ 31,641.00	$ 77,874.00
		12"	$ 32,375.00	$ 82,167.00

Housing Details

- ☆ Swing Bolt lid
- ☆ Guide post included for each element
- ☆ Fully welded **Universal base cups** to accept DOE and 222.
- ☆ Rated at **150 PSI inlet pressure at 200°F**
- ☆ **150# ANSI Flange** connections
- ☆ Heavy duty welded on legs
- ☆ **316SS** bottom cup, top cup, springs and V-post.
- ☆ **Add 25% to price of 304SS Housing for price of 316SS Housing.**

© AMBF 2017

All weights & dimensions are approximate. Dimensions will vary with material selection & psi.

www.americanmeltblown.com
1030 East Elm Street • Rensselaer, IN 47978
(219) 866-3500 - Office
(219) 866-3570 - Fax
order@ambf.us - Email

AMERICAN
MELT BLOWN & FILTRATION

List Prices

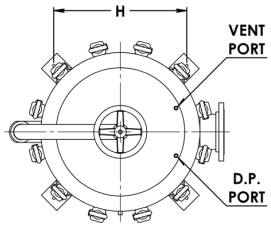

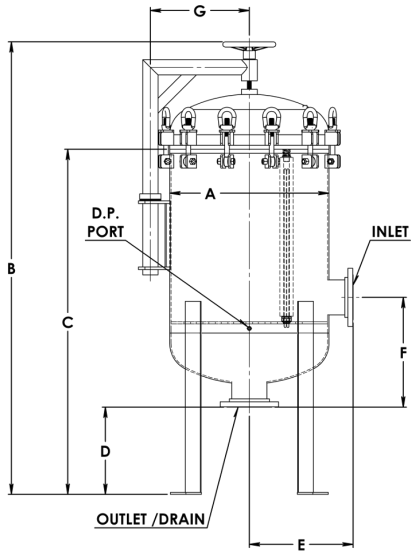

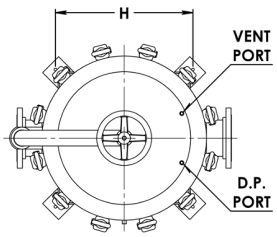

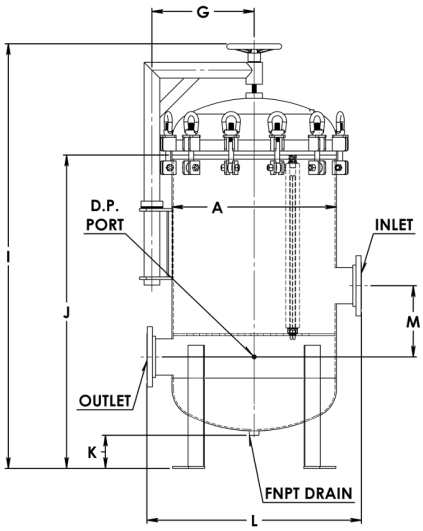

HOUSING	# OF CARTRIDGES	CARTRIDGE LENGTH	CONNECTION SIZE	DIMENSIONS															
				UNIT	A	B	C	D	E	F	G	H	I	J	K	L	M	WEIGHT	
MR12HC	11	20"	2	IN	12	55.4	42	8	10.4	20.4	9.2	11.7	54	40.6	6	20.8	11	LBS	325
				CM	31	141	107	20	26	52	23	29.7	137	103	15	53	28	KG	147
			3	IN	12	57.5	44.1	10	10.6	20.5	9.2	11.7	54	40.6	6	21.1	11	LBS	335
				CM	31	146	112	25	27	52	23	29.7	137	103	15	54	28	KG	152
			4	IN	12	60	46.6	12.5	10.7	20.5	9.2	11.7	54	40.6	6	21.4	11	LBS	345
				CM	31	152	118	32	27	52	23	29.7	137	103	15	54	28	KG	157
		30"	2	IN	12	65.4	52	8	10.4	20.4	9.2	11.7	64	50.6	6	20.8	11	LBS	325
				CM	31	166	132	20	26	52	23	29.7	163	129	15	53	28	KG	147
			3	IN	12	67.5	54.1	10	10.6	20.5	9.2	11.7	64	50.6	6	21.1	11	LBS	335
				CM	31	172	137	25	27	52	23	29.7	163	129	15	54	28	KG	152
			4	IN	12	70	56.6	12.5	10.7	20.5	9.2	11.7	64	50.6	6	21.4	11	LBS	345
				CM	31	178	144	32	27	52	23	29.7	163	129	15	54	28	KG	157
		40"	2	IN	12	75.4	62	8	10.4	20.4	9.2	11.7	74	60.6	6	20.8	11	LBS	325
				CM	31	192	158	20	26	52	23	29.7	188	154	15	53	28	KG	147
			3	IN	12	77.5	64.1	10	10.6	20.5	9.2	11.7	74	60.6	6	21.1	11	LBS	335
				CM	31	197	163	25	27	52	23	29.7	188	154	15	54	28	KG	152
			4	IN	12	80	66.5	12.5	10.7	20.5	9.2	11.7	74	60.6	6	21.4	11	LBS	345
				CM	31	203	169	32	27	52	23	29.7	188	154	15	54	28	KG	157
MR16HC	20	20"	2	IN	16	56.9	42.8	8	12	20.5	10.9	15	55.6	41.5	6	22.8	11	LBS	400
				CM	41	145	109	20	31	52	28	38	141	105	15	58	28	KG	181
			3	IN	16	59	44.9	10	12.2	20.6	10.9	15	55.6	41.5	6	23.1	11	LBS	410
				CM	41	150	114	25	31	52	28	38	141	105	15	59	28	KG	186
			4	IN	16	61.6	47.5	12.5	12.3	20.6	10.9	15	55.6	41.5	6	23.4	11	LBS	420
				CM	41	157	121	32	31	52	28	38	141	105	15	59	28	KG	190
		30"	2	IN	16	66.9	52.8	8	12	20.5	10.9	15	65.6	51.5	6	22.8	11	LBS	400
				CM	41	170	134	20	31	52	28	38	167	131	15	58	28	KG	181
			3	IN	16	69	54.9	10	12.2	20.6	10.9	15	65.6	51.5	6	23.1	11	LBS	410
				CM	41	175	140	25	31	52	28	38	167	131	15	59	28	KG	186
			4	IN	16	71.6	57.5	12.5	12.3	20.6	10.9	15	65.6	51.5	6	23.4	11	LBS	420
				CM	41	182	146	32	31	52	28	38	167	131	15	59	28	KG	190
		40"	2	IN	16	76.9	62.8	8	12	20.5	10.9	15	75.6	61.5	6	22.8	11	LBS	400
				CM	41	195	160	20	31	52	28	38	192	156	15	58	28	KG	181
			3	IN	16	79	64.9	10	12.2	20.6	10.9	15	75.6	61.5	6	23.1	11	LBS	410
				CM	41	201	165	25	31	52	28	38	192	156	15	59	28	KG	186
			4	IN	16	81.6	67.5	12.5	12.3	20.6	10.9	15	75.6	61.5	6	23.4	11	LBS	420
				CM	41	207	172	32	31	52	28	38	192	156	15	59	28	KG	190
MR18HC	26	20"	2	IN	18	58	43.4	8	13	20.5	11.9	16.5	56.6	42	6.1	24.8	11	LBS	525
				CM	46	147	110	20	33	52	30	42	144	107	16	63	28	KG	238
			3	IN	18	61.5	45.5	10	13.2	20.6	11.9	16.5	56.6	42	6.1	26.4	11	LBS	535
				CM	46	156	116	25	34	52	30	42	144	107	16	67	28	KG	243
			4	IN	18	62.7	48.1	12.5	13.3	20.7	11.9	16.5	56.6	42	6.1	26.6	11	LBS	545
				CM	46	159	122	32	34	53	30	42	144	107	16	68	28	KG	247
		30"	2	IN	18	68	53.4	8	13	20.5	11.9	16.5	66.7	52	6.1	24.8	11	LBS	525
				CM	46	173	136	20	33	52	30	42	169	132	16	63	28	KG	238
			3	IN	18	71.5	55.5	10	13.2	20.6	11.9	16.5	66.7	52	6.1	26.4	11	LBS	535
				CM	46	182	141	25	34	52	30	42	169	132	16	67	28	KG	243
			4	IN	18	72.7	58.1	12.5	13.3	20.7	11.9	16.5	66.7	52	6.1	26.6	11	LBS	545
				CM	46	185	148	32	34	53	30	42	169	132	16	68	28	KG	247
		40"	2	IN	18	78	63.4	8	13	20.5	11.9	16.5	76.6	62	6.1	24.8	11	LBS	525
				CM	46	198	161	20	33	52	30	42	195	158	16	63	28	KG	238
			3	IN	18	81.5	65.5	10	13.2	20.6	11.9	16.5	76.6	62	6.1	26.4	11	LBS	535
				CM	46	207	166	25	34	52	30	42	195	158	16	67	28	KG	243
			4	IN	18	82.7	68.1	12.5	13.3	20.7	11.9	16.5	76.6	62	6.1	26.6	11	LBS	545
				CM	46	210	173	32	34	53	30	42	195	158	16	68	28	KG	247
MR24HC	50	20"	3	IN	24	65.8	47	10	16.2	20.4	15.6	20.8	64.6	45.8	6.1	30.8	13	LBS	625
				CM	61	167	119	25	41	52	40	53	164	116	16	78	33	KG	283
			4	IN	24	68.5	49.6	12.5	16.3	20.5	15.6	20.8	64.6	45.8	6.1	32.6	13	LBS	635
				CM	61	174	126	32	41	52	40	53	164	116	16	83	33	KG	288
			6	IN	24	72.6	53.8	16.5	16.6	20.6	15.6	20.8	64.6	45.8	6.1	33.1	13	LBS	645
				CM	61	184	137	42	42	52	40	53	164	116	16	84	33	KG	293
		30"	3	IN	24	75.8	57	10	16.2	20.4	15.6	20.8	74.6	55.8	6.1	30.8	13	LBS	625
				CM	61	193	145	25	41	52	40	53	190	142	16	78	33	KG	283
			4	IN	24	78.5	59.6	12.5	16.3	20.5	15.6	20.8	74.6	55.8	6.1	32.6	13	LBS	635
				CM	61	199	151	32	41	52	40	53	190	142	16	83	33	KG	288
			6	IN	24	82.6	63.8	16.5	16.6	20.6	15.6	20.8	74.6	55.8	6.1	33.1	13	LBS	645
				CM	61	210	162	42	42	52	40	53	190	142	16	84	33	KG	293
		40"	3	IN	24	85.8	67	10	16.2	20.4	15.6	20.8	84.6	65.8	6.1	30.8	13	LBS	625
				CM	61	218	170	25	41	52	40	53	215	167	16	78	33	KG	283
			4	IN	24	88.5	69.6	12.5	16.3	20.5	15.6	20.8	84.6	65.8	6.1	32.6	13	LBS	635
				CM	61	225	177	32	41	52	40	53	215	167	16	83	33	KG	288
			6	IN	24	92.6	73.8	16.5	16.6	20.6	15.6	20.8	84.6	65.8	6.1	33.1	13	LBS	645
				CM	61	235	188	42	42	52	40	53	215	167	16	84	33	KG	293

Continues to next page

All weights & dimensions are approximate. Dimensions will vary with material selection & psi.

© AMBF 2017

www.americanmeltblown.com
1030 East Elm Street • Rensselaer, IN 47978
(219) 866-3500 - Office
(219) 866-3570 - Fax
order@ambf.us - Email

List Prices

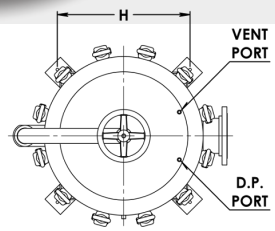

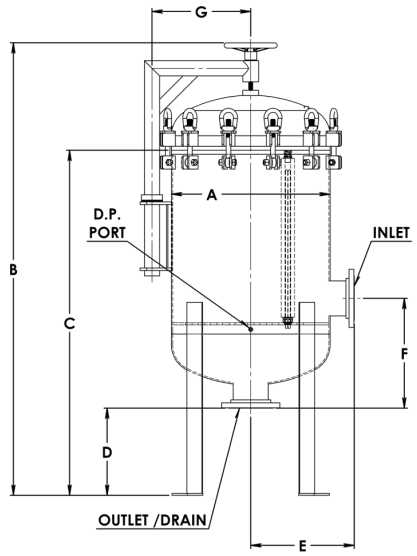

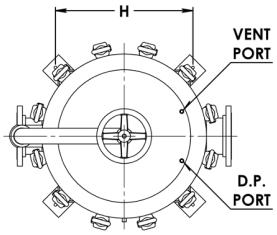

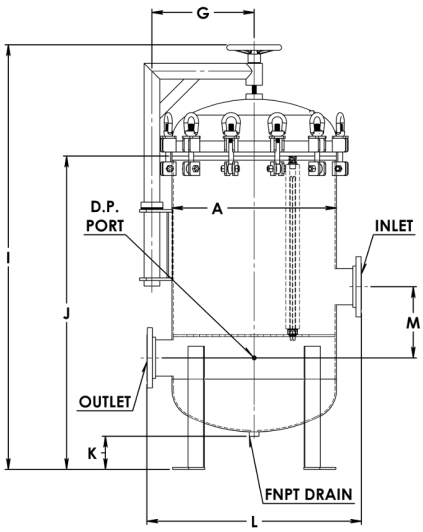

HOUSING	# OF CARTRIDGES	CARTRIDGE LENGTH	CONNECTION SIZE	DIMENSIONS																WEIGHT
				UNIT	A	B	C	D	E	F	G	H	I	J	K	L	M		
MR30HC	78	20"	3	IN	30	69	48.6	10	19.2	20.5	18.7	25.1	67.6	47.3	6	36.8	13	LBS	665
				CM	76	175	123	25	49	52	48	64	172	120	15	94	33	KG	302
			4	IN	30	71.5	51.1	12.5	19.3	20.6	18.7	25.1	67.6	47.3	6	38.6	13	LBS	705
				CM	76	182	130	32	49	52	48	64	172	120	15	98	33	KG	320
			6	IN	30	75.6	55.3	16.5	19.6	20.8	18.7	25.1	67.6	47.3	6	39.1	13	LBS	850
				CM	76	192	141	42	50	53	48	64	172	120	15	99	33	KG	385
		30"	3	IN	30	79	58.6	10	19.2	20.5	18.7	25.1	77.6	57.3	6	36.8	13	LBS	665
				CM	76	201	149	25	49	52	48	64	197	146	15	94	33	KG	302
			4	IN	30	81.5	61.1	12.5	19.3	20.6	18.7	25.1	77.6	57.3	6	38.6	13	LBS	705
				CM	76	207	155	32	49	52	48	64	197	146	15	98	33	KG	320
			6	IN	30	85.6	65.3	16.5	19.6	20.8	18.7	25.1	77.6	57.3	6	39.1	13	LBS	850
				CM	76	217	166	42	50	53	48	64	197	146	15	99	33	KG	385
		40"	3	IN	30	89	68.6	10	19.2	20.5	18.7	25.1	87.6	67.3	6	36.8	13	LBS	665
				CM	76	226	174	25	49	52	48	64	223	171	15	94	33	KG	302
			4	IN	30	91.5	71.1	12.5	19.3	20.6	18.7	25.1	87.6	67.3	6	38.6	13	LBS	705
				CM	76	232	181	32	49	52	48	64	223	171	15	98	33	KG	320
			6	IN	30	95.6	75.3	16.5	19.6	20.8	18.7	25.1	87.6	67.3	6	39.1	13	LBS	850
				CM	76	243	191	42	50	53	48	64	223	171	15	99	33	KG	385
MR36HC	112	20"	4	IN	36	74.7	52.6	12.5	22.3	30.4	21.5	29.3	72.8	50.8	6	42.8	15	LBS	870
				CM	91	190	134	32	57	77	55	74	185	129	15	109	38	KG	395
			6	IN	36	78.8	56.8	16.5	22.6	30.5	21.5	29.3	72.8	50.8	6	45.1	15	LBS	1,010
				CM	91	200	144	42	57	78	55	74	185	129	15	115	38	KG	458
			8	IN	36	83.2	61.1	20.8	22.8	30.6	21.5	29.3	72.8	50.8	6	45.5	15	LBS	1,150
				CM	91	211	155	53	58	78	55	74	185	129	15	116	38	KG	522
		30"	4	IN	36	84.7	62.6	12.5	22.3	30.4	21.5	29.3	82.8	60.8	6	42.8	15	LBS	870
				CM	91	215	159	32	57	77	55	74	210	154	15	109	38	KG	395
			6	IN	36	88.8	66.8	16.5	22.6	30.5	21.5	29.3	82.8	60.8	6	45.1	15	LBS	1,010
				CM	91	226	170	42	57	78	55	74	210	154	15	115	38	KG	458
			8	IN	36	93.2	71.1	20.8	22.8	30.6	21.5	29.3	82.8	60.8	6	45.5	15	LBS	1,150
				CM	91	237	181	53	58	78	55	74	210	154	15	116	38	KG	522
		40"	4	IN	36	94.7	72.6	12.5	22.3	30.4	21.5	29.3	92.8	70.8	6	42.8	15	LBS	870
				CM	91	241	184	32	57	77	55	74	236	180	15	109	38	KG	395
			6	IN	36	98.8	76.8	16.5	22.6	30.5	21.5	29.3	92.8	70.8	6	45.1	15	LBS	1,010
				CM	91	251	195	42	57	78	55	74	236	180	15	115	38	KG	458
			8	IN	36	103.2	81.1	20.8	22.8	30.6	21.5	29.3	92.8	70.8	6	45.5	15	LBS	1,150
				CM	91	262	206	53	58	78	55	74	236	180	15	116	38	KG	522
MR42HC	155	20"	6	IN	42	82.2	58.6	16.6	25.6	30.5	24.6	33.6	79.8	56.3	6	49.5	16	LBS	1,960
				CM	107	209	149	42	65	78	63	85	203	143	15	126	41	KG	889
			8	IN	42	86.2	62.6	20.5	25.8	30.5	24.6	33.6	79.8	56.3	6	51.5	16	LBS	2,070
				CM	107	219	159	52	66	78	63	85	203	143	15	131	41	KG	939
			10	IN	42	90.7	67.1	24.9	25.9	30.6	24.6	33.6	79.8	56.3	6	51.9	16	LBS	2,200
				CM	107	230	170	63	66	78	63	85	203	143	15	132	41	KG	998
		30"	6	IN	42	92.2	68.6	16.6	25.6	30.5	24.6	33.6	89.8	66.3	6	49.5	16	LBS	1,960
				CM	107	234	174	42	65	78	63	85	228	168	15	126	41	KG	889
			8	IN	42	96.2	72.6	20.5	25.8	30.5	24.6	33.6	89.8	66.3	6	51.5	16	LBS	2,070
				CM	107	244	184	52	66	78	63	85	228	168	15	131	41	KG	939
			10	IN	42	100.7	77.1	24.9	25.9	30.6	24.6	33.6	89.8	66.3	6	51.9	16	LBS	2,200
				CM	107	256	196	63	66	78	63	85	228	168	15	132	41	KG	998
		40"	6	IN	42	102.2	78.6	16.6	25.6	30.5	24.6	33.6	99.8	76.3	6	49.5	16	LBS	1,960
				CM	107	260	200	42	65	78	63	85	254	194	15	126	41	KG	889
			8	IN	42	106.2	82.6	20.5	25.8	30.5	24.6	33.6	99.8	76.3	6	51.5	16	LBS	2,070
				CM	107	270	210	52	66	78	63	85	254	194	15	131	41	KG	939
			10	IN	42	110.7	87.1	24.9	25.9	30.6	24.6	33.6	99.8	76.3	6	51.9	16	LBS	2,200
				CM	107	281	221	63	66	78	63	85	254	194	15	132	41	KG	998
MR48HC	205	20"	8	IN	48	89.5	64.5	20.8	28.8	30.4	27.6	37.9	82.8	57.8	6	57.5	17	LBS	2,200
				CM	122	227	164	53	73	77	70	96	210	147	15	146	43	KG	998
			10	IN	48	93.8	68.8	25	28.9	30.5	27.6	37.9	82.8	57.8	6	57.9	17	LBS	2,350
				CM	122	238	175	64	73	78	70	96	210	147	15	147	43	KG	1,066
			12	IN	48	98.4	73.4	29.5	29.2	30.6	27.6	37.9	82.8	57.8	6	58.4	17	LBS	2,530
				CM	122	250	186	75	74	78	70	96	210	147	15	148	43	KG	1,147
		30"	8	IN	48	99.5	74.5	20.8	28.8	30.4	27.6	37.9	92.8	67.8	6	57.5	17	LBS	2,200
				CM	122	253	189	53	73	77	70	96	236	172	15	146	43	KG	998
			10	IN	48	103.8	78.8	25	28.9	30.5	27.6	37.9	92.8	67.8	6	57.9	17	LBS	2,350
				CM	122	264	200	64	73	78	70	96	236	172	15	147	43	KG	1,066
			12	IN	48	108.4	83.4	29.5	29.2	30.6	27.6	37.9	92.8	67.8	6	58.4	17	LBS	2,530
				CM	122	275	212	75	74	78	70	96	236	172	15	148	43	KG	1,147
		40"	8	IN	48	109.5	84.5	20.8	28.8	30.4	27.6	37.9	102.8	77.8	6	57.5	17	LBS	2,200
				CM	122	278	215	53	73	77	70	96	261	198	15	146	43	KG	998
			10	IN	48	113.8	88.8	25	28.9	30.5	27.6	37.9	102.8	77.8	6	57.9	17	LBS	2,350
				CM	122	289	226	64	73	78	70	96	261	198	15	147	43	KG	1,066
			12	IN	48	118.4	93.4	29.5	29.2	30.6	27.6	37.9	102.8	77.8	6	58.4	17	LBS	2,530
				CM	122	301	237	75	74	78	70	96	261	198	15	148	43	KG	1,147

© AMBF 2017

All weights & dimensions are approximate. Dimensions will vary with material selection & psi.